Casey Concrete

caseyconcrete.ca

140 mm (6 in.) BREAKER BLOCK

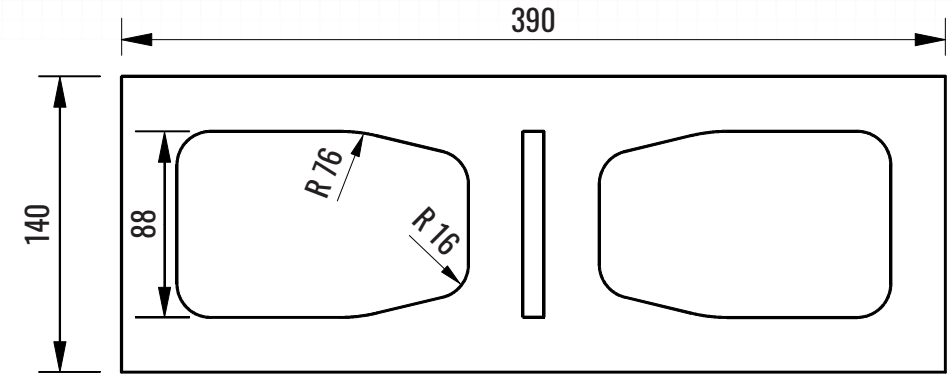

TOP VIEW

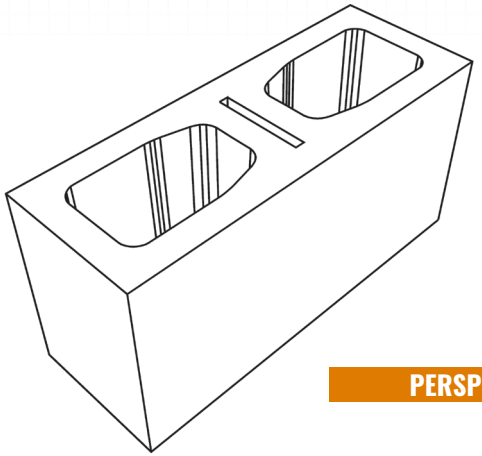

PERSPECTIVE VIEW

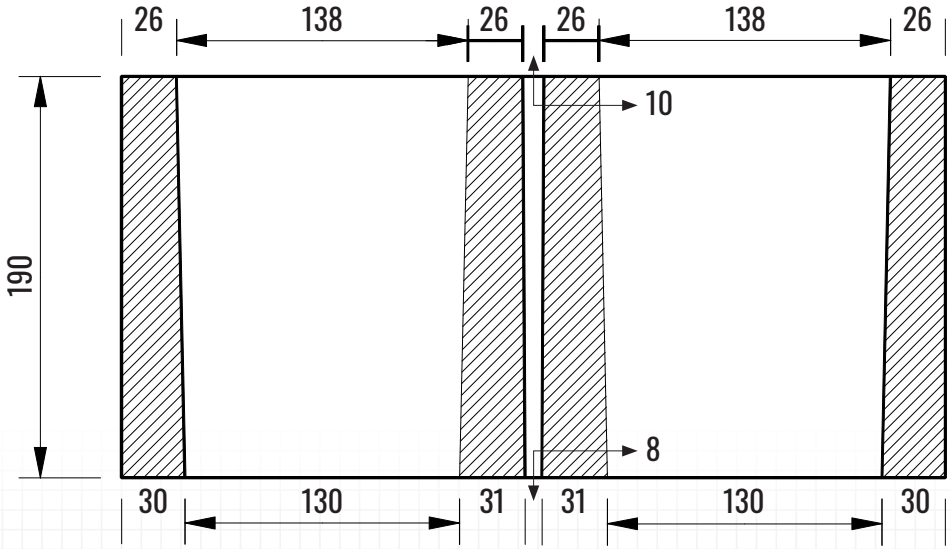

FRONT X-SECTION

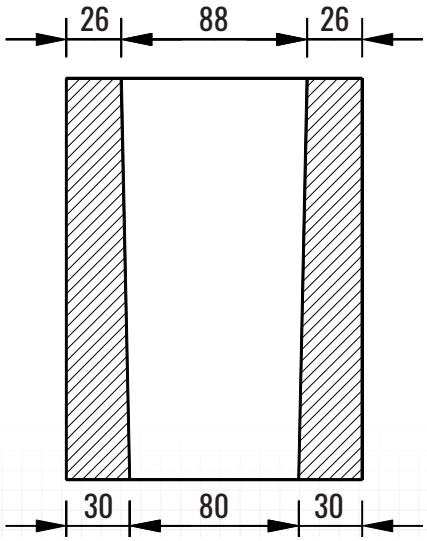

END X-SECTION

PLEASE NOTE: Products are made from natural material sources and therefore color variation and efflorescence may occur.

PACKAGING:

Pieces Per Pallet:	26 (Plus 79 Stretchers)
Weight Per Piece:	14.07 kg (31 lbs)
Weight Per Pallet:	1477 kg (3255 lbs)
Coverage Per Piece:	0.8 sq. ft (84 sq. ft per pallet)

DIMENSIONAL TOLERANCES:

Meets the requirements of CSA A165.1 Concrete Masonry

Length:	-3 to +3 mm
Width:	-2 to +2 mm
Height:	-3 to +2 mm

PHYSICAL PROPERTIES:

Meets the requirements of CSA A165.1 Concrete Masonry

Compressive Strength:	Min 15 MPa @ 28 Days
Absorption (%):	8.0 % Maximum @ 28 Days

May 2024